TRAVELNOTE

Component Index

Fuse Block-Rear
Voice Recorder

TRAVELNOTE

Circuit Schematic

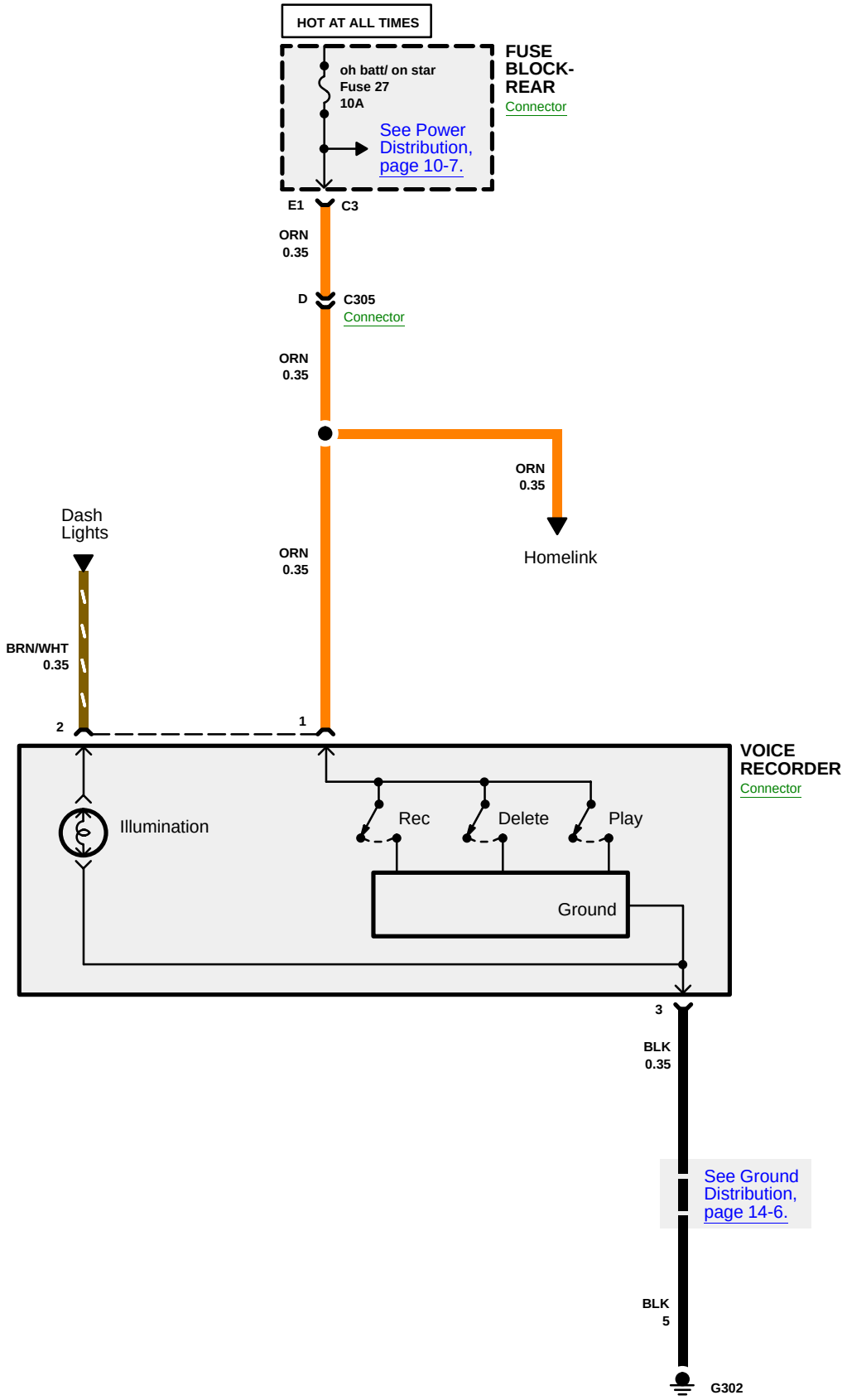

TRAVELNOTE

Component Location Index

(Refer to Section 201 for photographs.)

Component		Photo No.
Fuse Block-Rear	Under the left rear seat	52
Voice Recorder	In the upper console	91
Connector		
C305 (16-BLK)	Inside upper console	91
Ground		
G302	On the lower left B-pillar	105